Zone	Mark	Description	Date	Sign

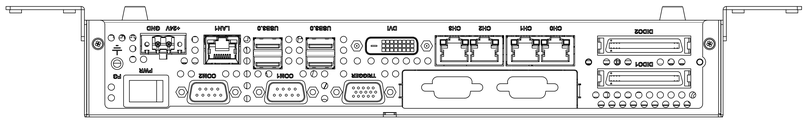

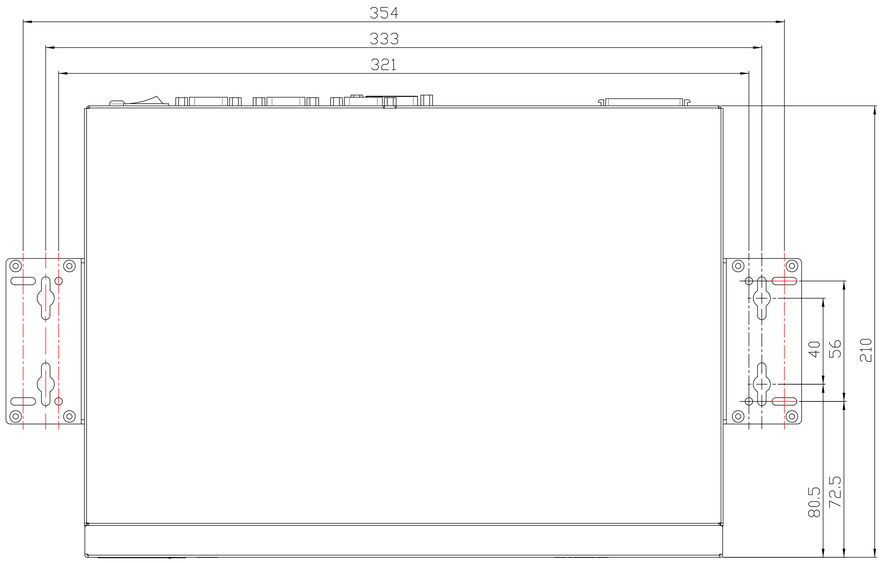

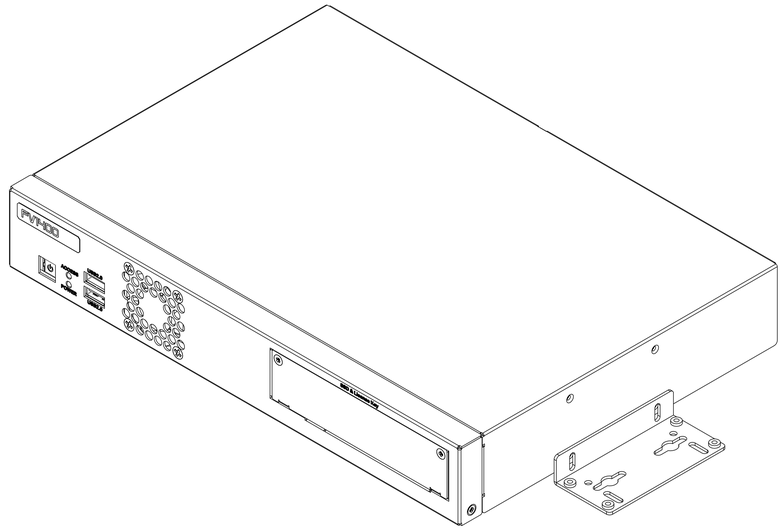

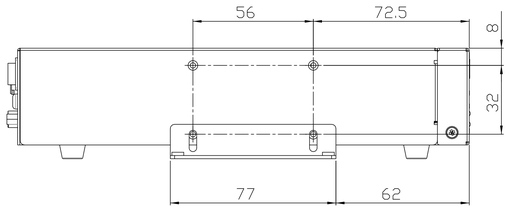

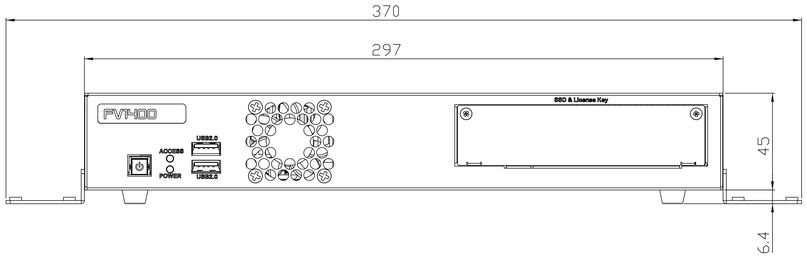

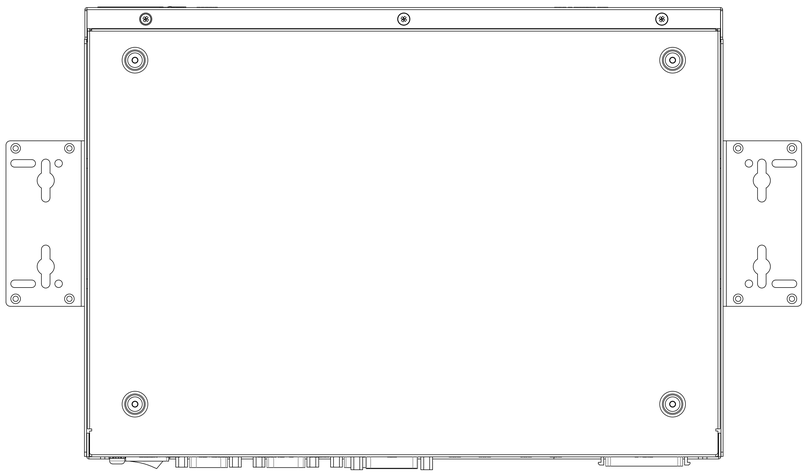

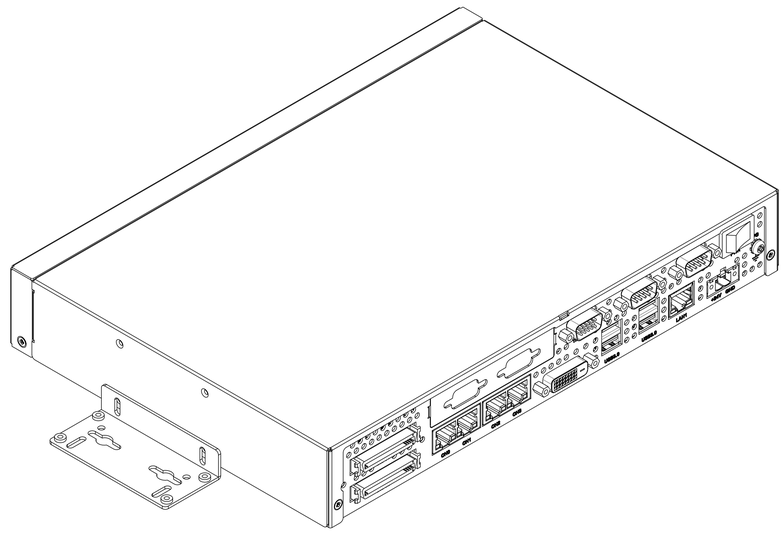

APPROVED			DESCRIPTION/PART NAME		
DRAWER			MODEL NAME	INTERIOR PART	
DESIGNER				APPEARANCE PART	
CHECKED					
MATERIAL			PART NO.	FV-N ADDED CODE	
FINISHING			FILE NAME	REV.	

DIMENSIONAL TOLERANCE: JIS: 0~5:±0.3 | 5~30:±0.5 | 30~120:±0.8 | 120~315:±1.2 | 315~1000:±2 | 1000~2000:±3 | 2000~4000:±4 | 4000~8000:±5 | 8000~12000:±6 | 12000~16000:±7 | 16000~20000:±8 | 20000~25000:±9 | 25000~30000:±10 | 30000~40000:±12 | 40000~50000:±14 | 50000~60000:±16 | 60000~70000:±18 | 70000~80000:±20 | 80000~90000:±22 | 90000~100000:±24 | 100000~120000:±26 | 120000~140000:±28 | 140000~160000:±30 | 160000~180000:±32 | 180000~200000:±34 | 200000~220000:±36 | 220000~240000:±38 | 240000~260000:±40 | 260000~280000:±42 | 280000~300000:±44 | 300000~320000:±46 | 320000~340000:±48 | 340000~360000:±50 | 360000~380000:±52 | 380000~400000:±54 | 400000~420000:±56 | 420000~440000:±58 | 440000~460000:±60 | 460000~480000:±62 | 480000~500000:±64 | 500000~520000:±66 | 520000~540000:±68 | 540000~560000:±70 | 560000~580000:±72 | 580000~600:±74

ANGLE TOLERANCE: DIM ±0° | TOL ±5°

D: 1/1000 (MAX) | DIMENSIONS AND ANGLES ARE PROJECTED

SCALE: 1:1 | UNITS: mm | SHEET: 1 OF 1 | SIZE: A0